Lana

Pablo Designs | Pablo Studio | 2015

Inspired by a fusion of craft and advanced manufacturing, Lana is designed to adapt to any space. Lana effortlessly attaches to metal surfaces, offering 360 degrees of rotation and unlimited height adjustment via a unique magnetic LED module. Lana's shade can also adapt to table, wall, and floor standing applications, complementing a variety of contract and hospitality settings.

HAWORTH® Collection

Lana

Pablo Designs | Pablo Studio | 2015 | Imported from China

Pablo®

Small Shade

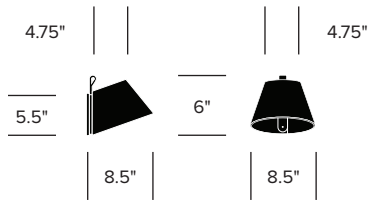

Medium Shade

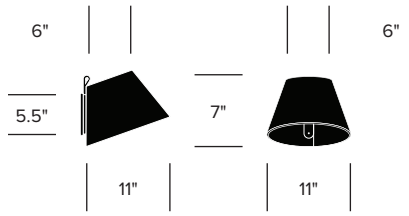

Large Shade

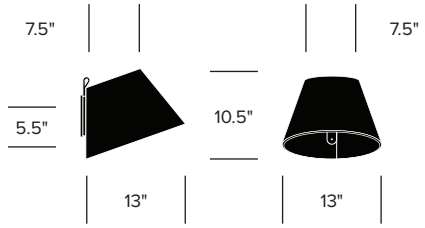

Small Table Light

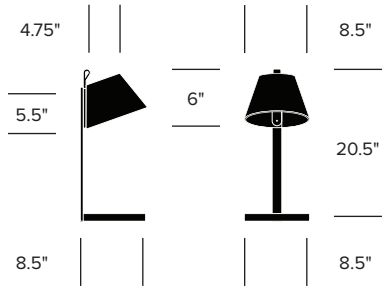

SURFACES

Shade Fabric
Arctic Blue Exterior, Grey Interior (NN-1)
Charcoal Exterior, Grey Interior (NN-2)
Moss Exterior, Grey Interior (NN-3)
Plum Exterior, Grey Interior (NN-4)
Stone Exterior, Grey Interior (NN-5)

Standard Base Trim
White (TR-L01)

Premium Base Trim
Chrome (TR-L02)

FEATURES AND SPECIFICATIONS

Voltage:	120V 60Hz
Power consumption:	5.5 watts
Color temperature:	3000K
Luminosity:	350 lumens
Luminaire efficacy:	64 lumens/watt
Color rendition index:	90+ CRI
Rated lifespan:	50,000 hours
Bulb type:	high output LED
Cord length:	9 feet

Lana ships flat-packed. Minor assembly is required.

All Lana lighting is ETL, CE, PSE, and RoHS certified.

Intertek

Lana

Pablo Designs | Pablo Studio | 2015 | Imported from China

Medium Table Light

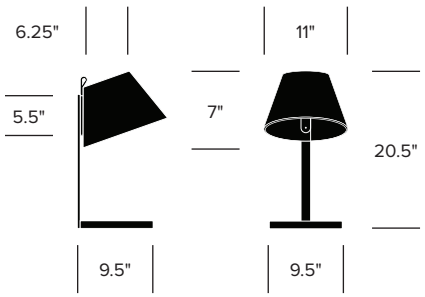

Large Table Light

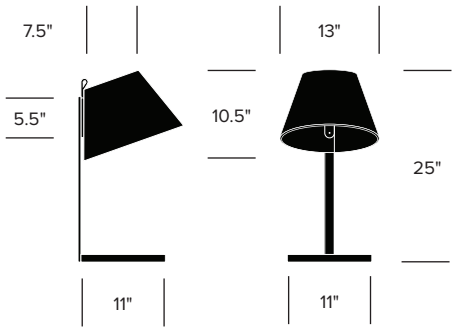

Floor Light

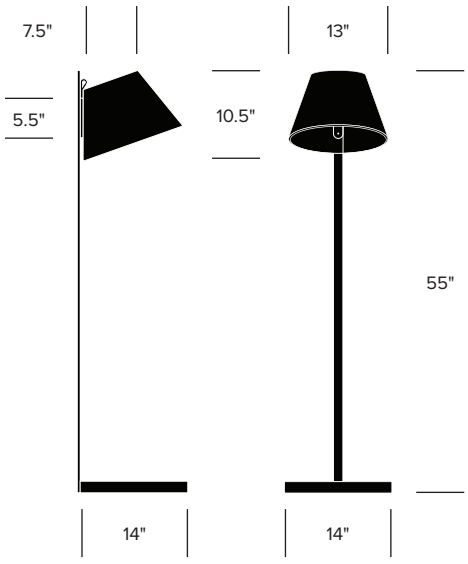

Lana

Pablo Designs | Pablo Studio | 2015 | Imported from China

Floor Light with Pedestal

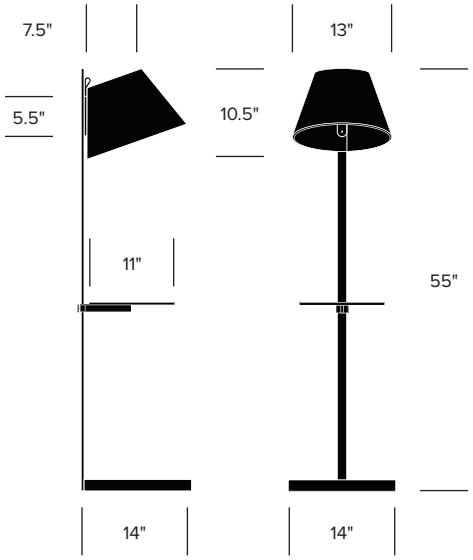

Haworth Collection is a trademark of Haworth, Inc.
©Haworth, Inc. 2018 12.18
haworth.com/collection | 616.393.1000