VERY®

Seminar Chair

Disassembly & Recycling Instructions

Tools Required

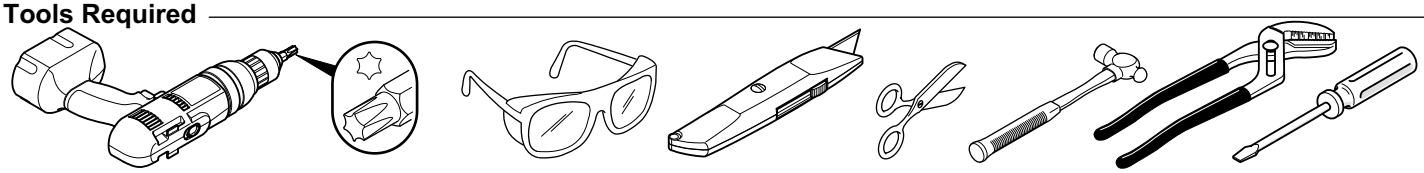

1

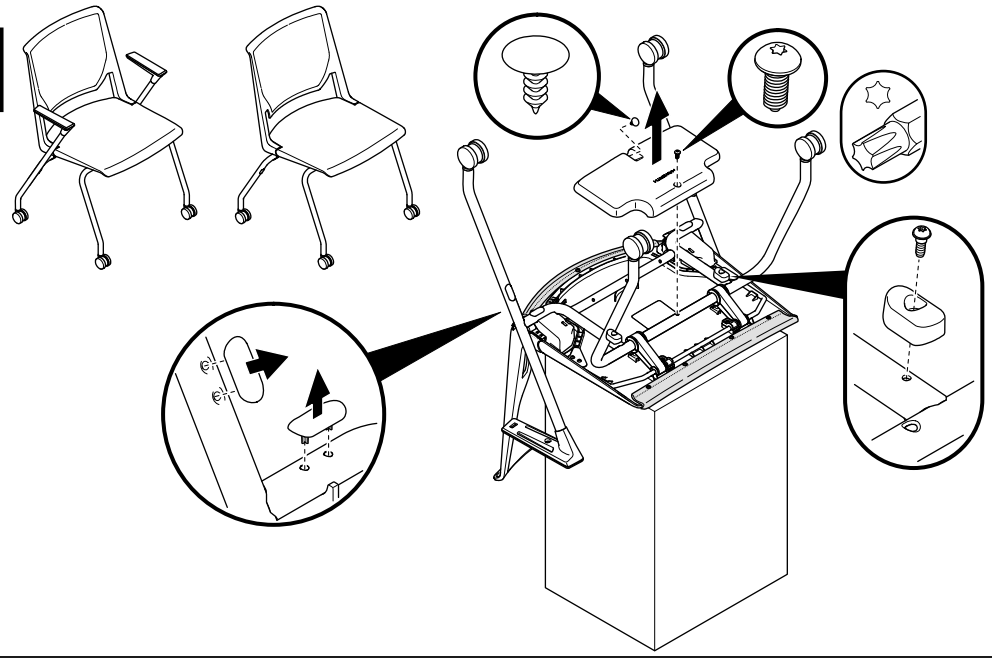

RECYCLE BINS

STEEL

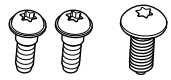

PLASTIC

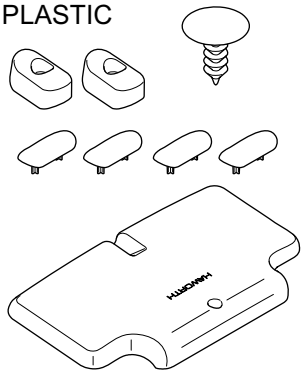

2

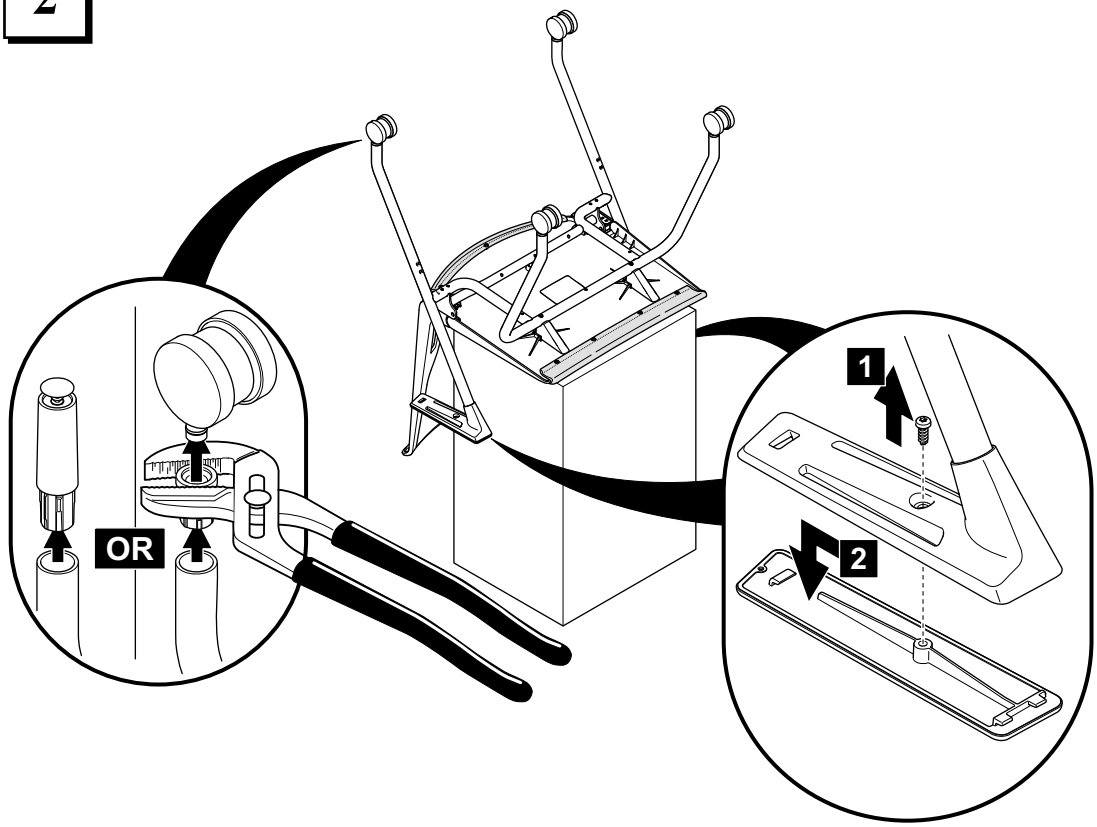

RECYCLE BINS

STEEL

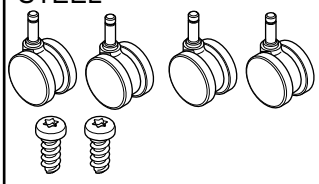

RUBBER

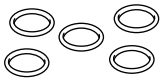

PLASTIC

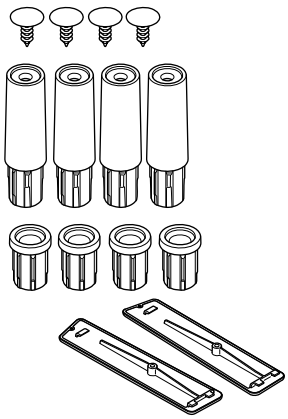

CUSTOMER SERVICE PHONE: 1-800-426-8562

3

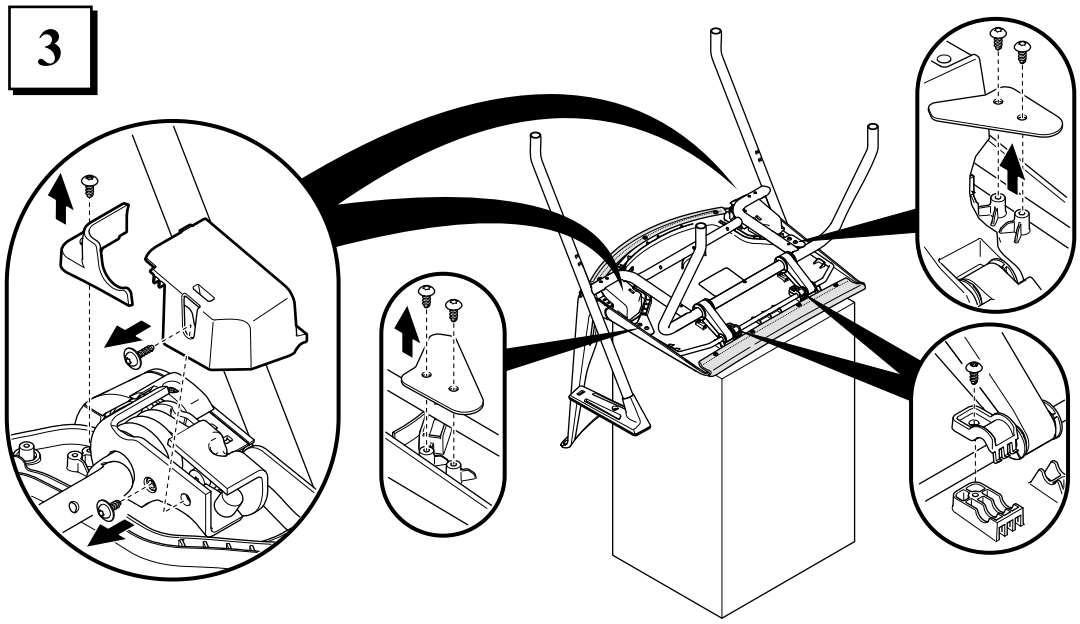

RECYCLE BINS

STEEL

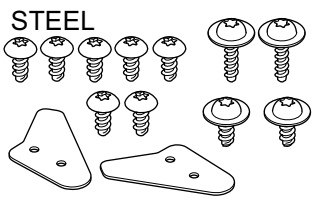

PLASTIC

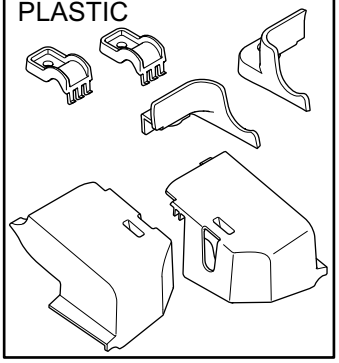

4

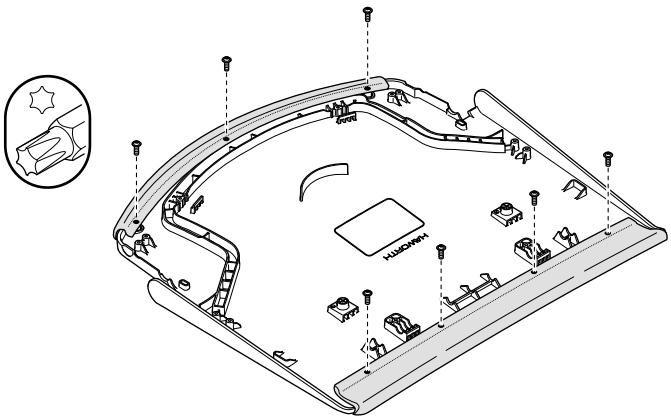

RECYCLE BINS

STEEL

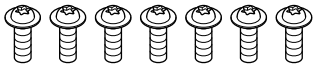

PLASTIC

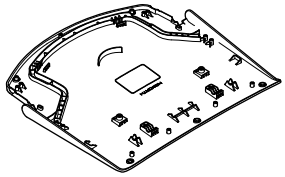

5

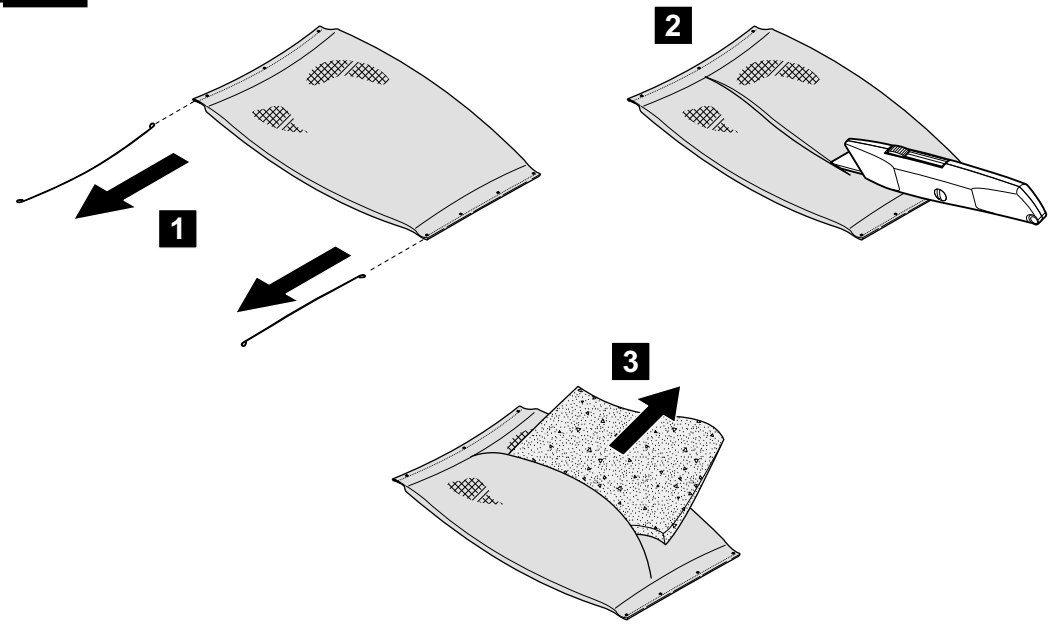

RECYCLE BINS

STEEL

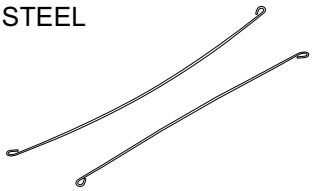

MATERIAL

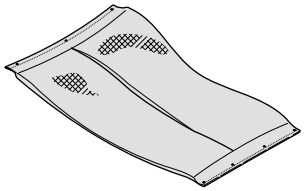

FOAM

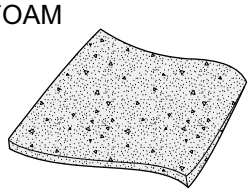

6

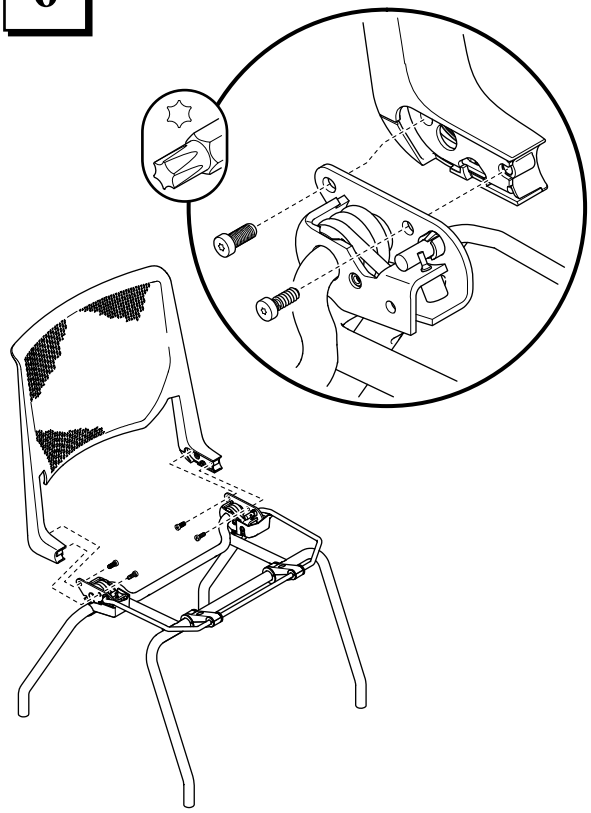

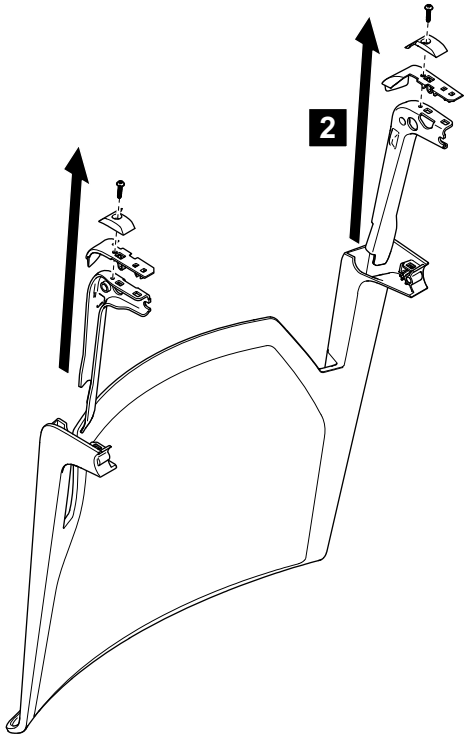

RECYCLE BINS

STEEL

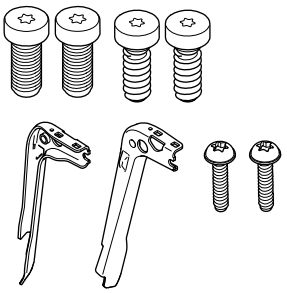

PLASTIC

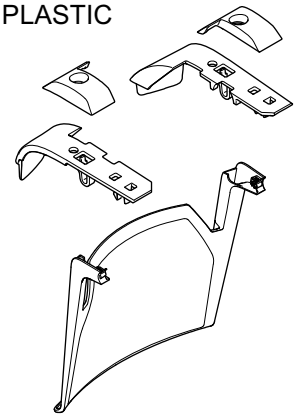

7

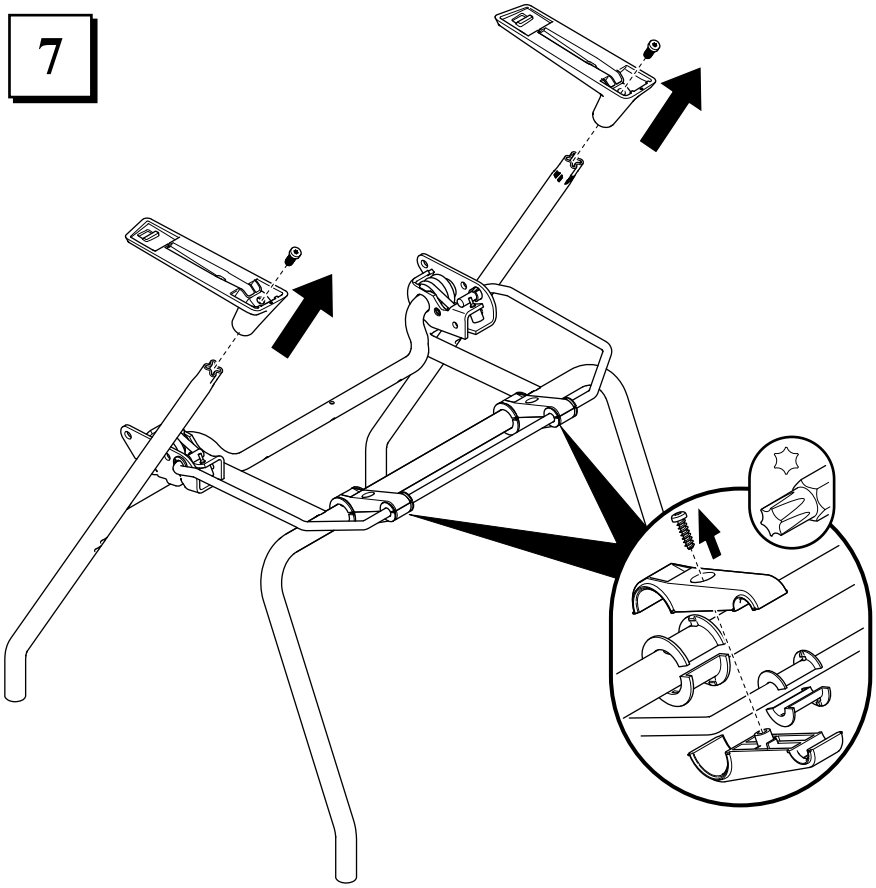

RECYCLE BINS

STEEL

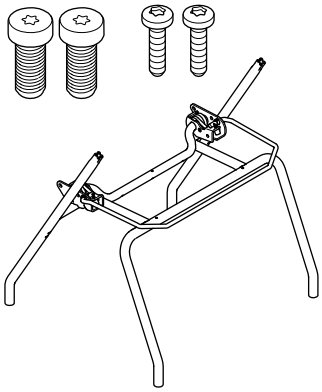

PLASTIC

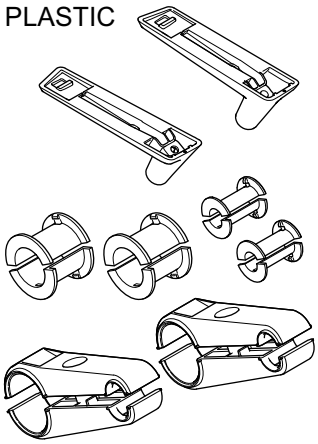

CUSTOMER SERVICE PHONE: 1-800-426-8562